ALARM LOCK
345 Bayview Avenue
Amityville, New York 11701
For Sales and Repairs 1-800-ALA-LOCK
For Technical Service 1-800-645-9440
Publicly traded on NASDAQ Symbol: NSSC

INSTALLATION TEMPLATE

DL1200
DL1300
PDL1300

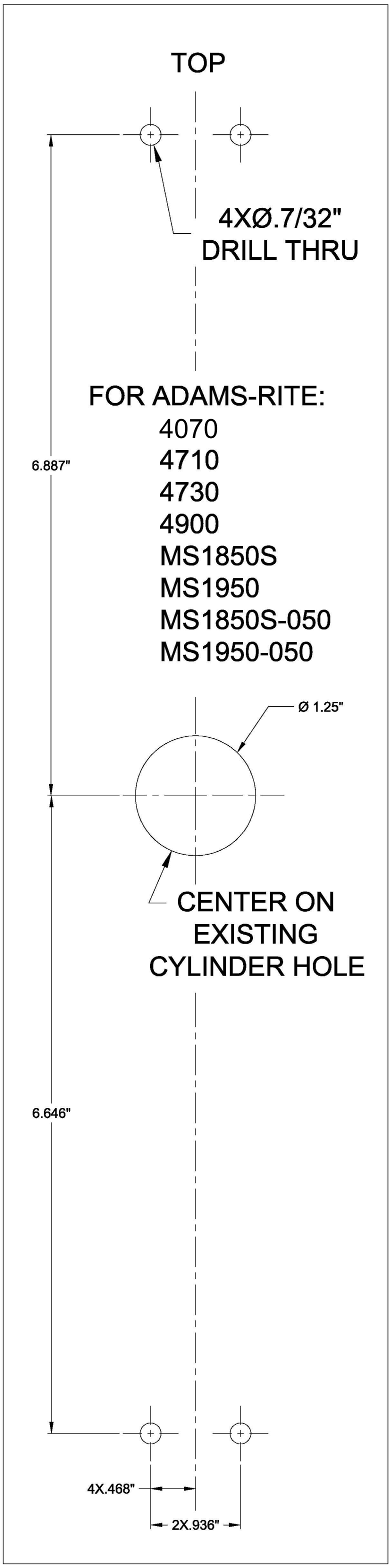

© ALARM LOCK 2006