ALREX™

PRO



Installation Instructions

Read All Instructions Before Beginning Installation

Before You Install:
- Machine the door and door frame according to the cut sheet.
- Pay attention to the handing (left or right) and top orientation of the hinges.
- If a Free Swing (Dummy) hinge is being used, please install in the middle hinge position.

1

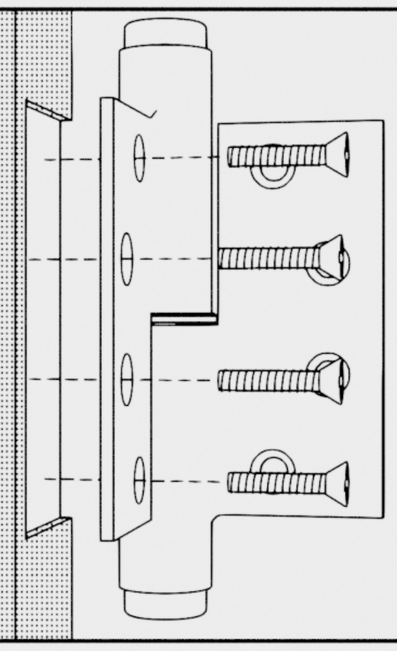

Attach To Door

Use provided fasteners to secure door.

2

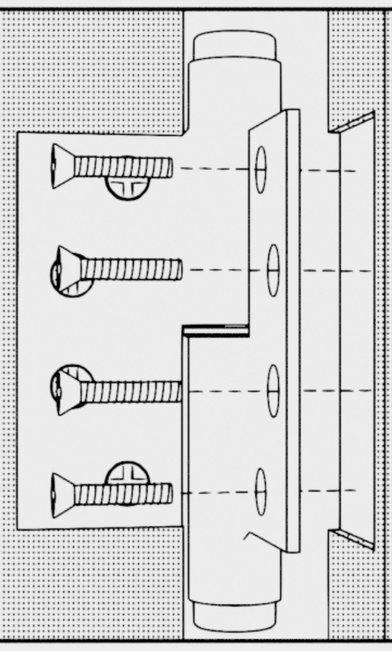

Attach To Door Frame

Use provided fasteners to secure the hinge into the frame.

How to Adjust the Hinges:
- Open and close the door to see how it moves.
- Adjust the top hinge first, then adjust the remaining hydraulic hinges in descending order.
- ONLY adjust in the closed position.

3

ONLY Use the tools provided to make adjustments with hinge.

Notice the notching to help you ensure all hinges are adjusted the same.

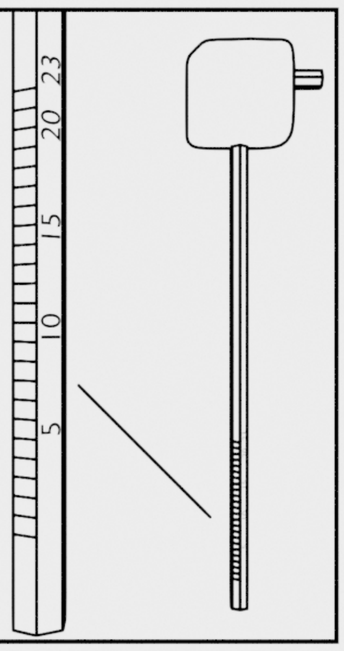

4

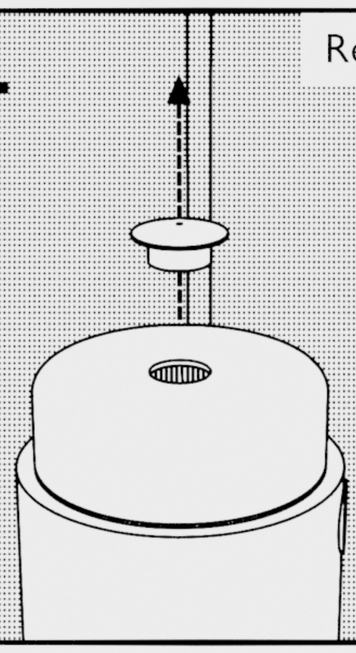

Remove dust plug.

5

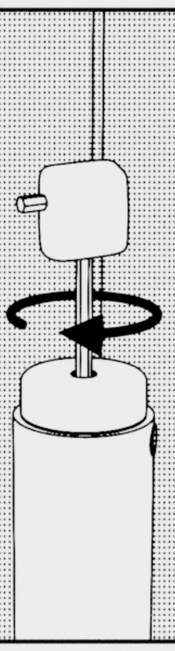

Adjust Closing Speed

Insert the tool into the top of each hydraulic hinge. Turn it clockwise to increase the closing force. Make small, equal adjustments until the closing speed is at your preferred speed. Use the gauge on the provided tool to match all hinges to the same setting.

Minimum gauge depth: 15

6

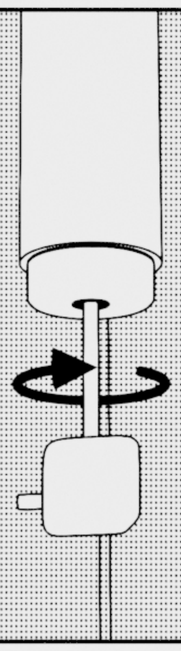

Adjust Latching Speed

Insert the tool into the bottom of each hydraulic hinge. Turn it counterclockwise to increase the latching speed. Make small, equal adjustments until the latching speed is at your preferred speed. Use the gauge on the provided tool to match all hinges to the same setting.

7

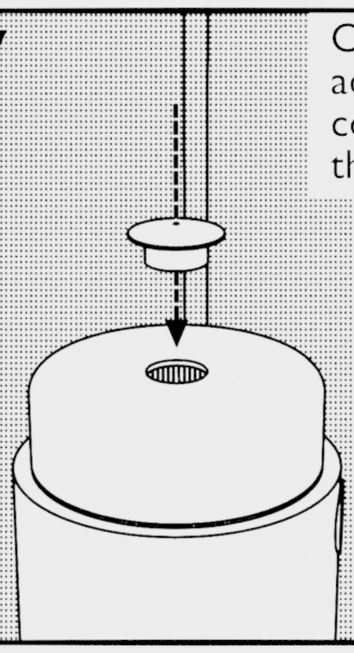

Once the top adjustment is complete, replace the dust plug.

Installation Video/Tutorial