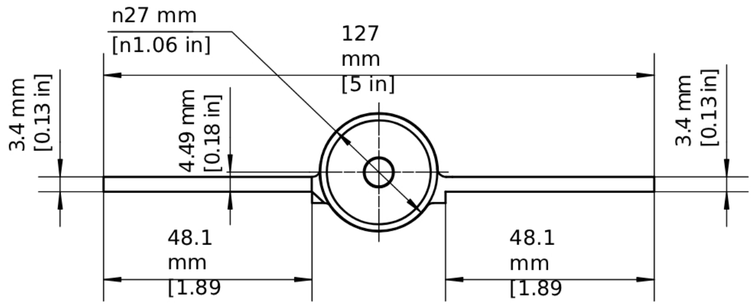
n27 mm
[n1.06 in]
127
mm
[5 in]
3.4 mm
[0.13 in]
4.49 mm
[0.18 in]
3.4 mm
[0.13 in]
48.1
mm
[1.89
48.1
mm
[1.89

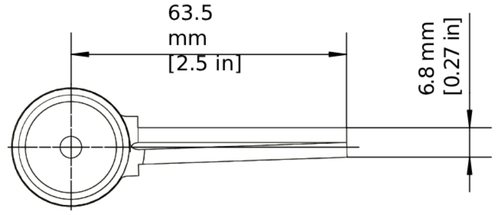
63.5
mm
[2.5 in]
6.8 mm
[0.27 in]

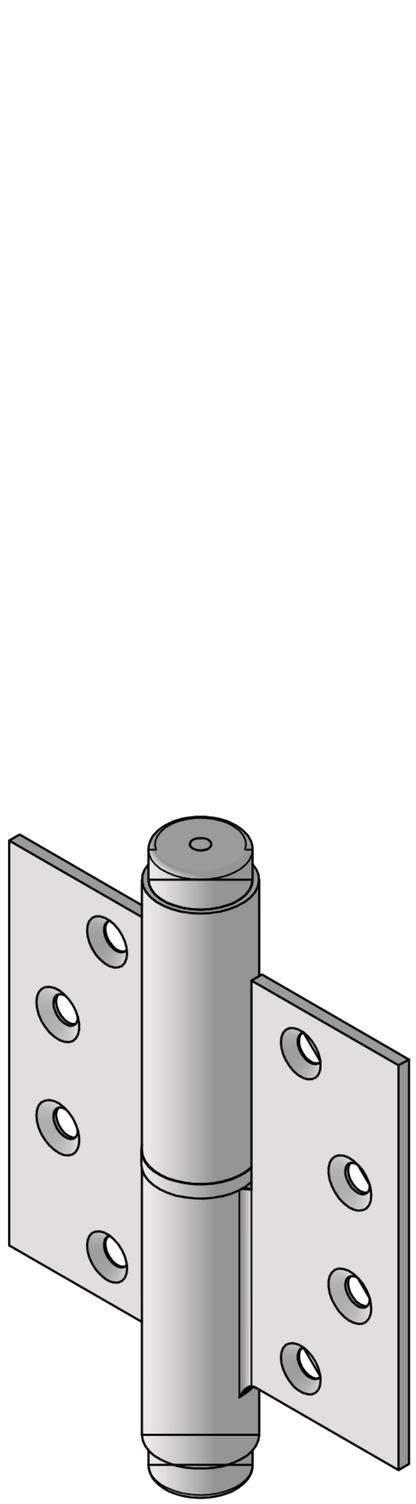

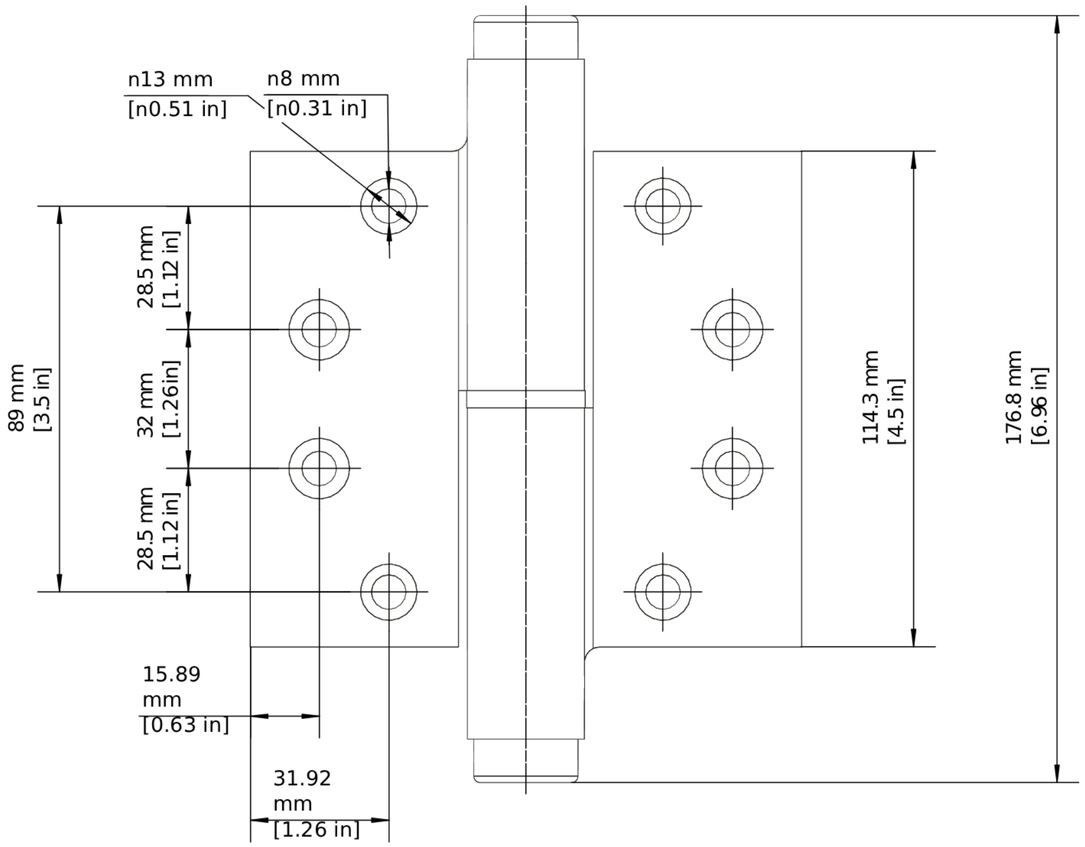
n13 mm
[n0.51 in]
n8 mm
[n0.31 in]
28.5 mm
[1.12 in]
89 mm
[3.5 in]
32 mm
[1.26in]
28.5 mm
[1.12 in]
15.89
mm
[0.63 in]
31.92
mm
[1.26 in]
114.3 mm
[4.5 in]
176.8 mm
[6.96 in]

ALREX™

PRO - 4.5"