
114.3 mm
[4.5 in]
3.4 mm
[0.13 in]
3.4 mm
[0.13 in]
41.8 mm
[1.64 in]
41.8 mm
[1.64 in]

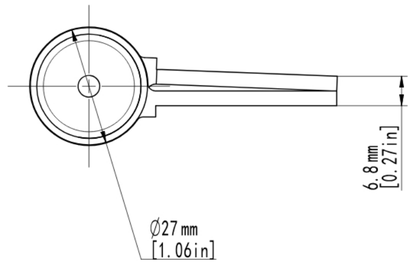
6.8 mm
[0.27 in]
Ø27 mm
[1.06 in]

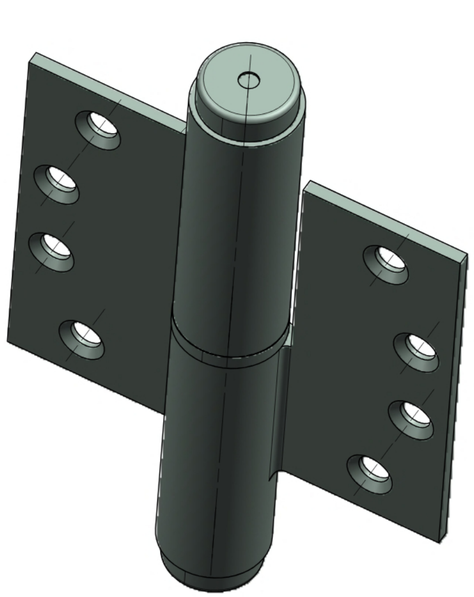

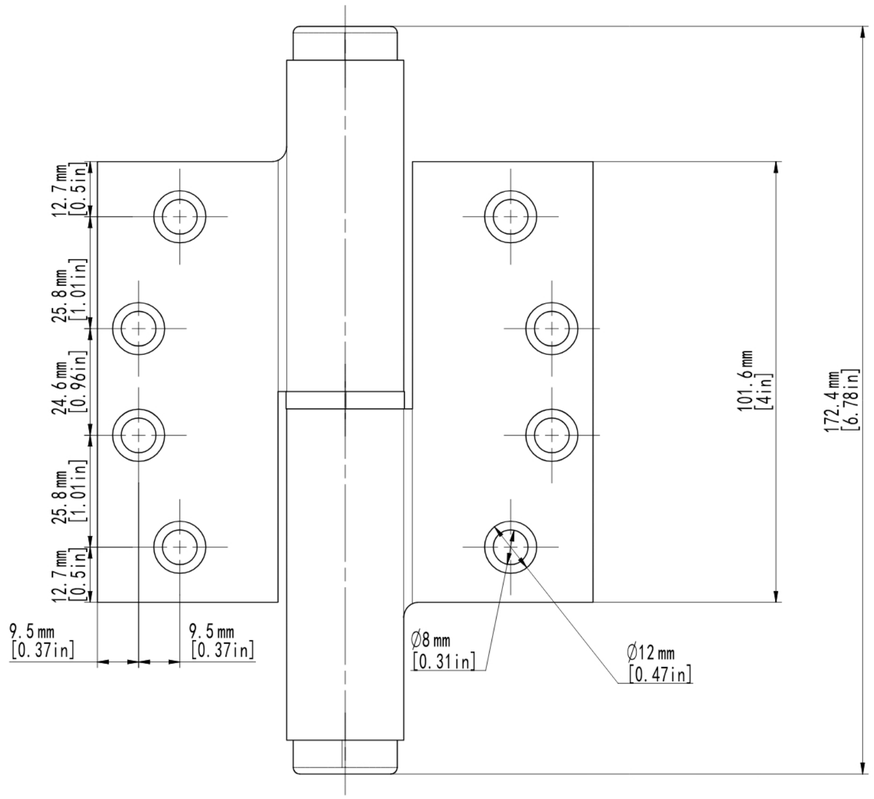
12.7 mm
[0.5 in]
25.8 mm
[1.01 in]
24.6 mm
[0.96 in]
25.8 mm
[1.01 in]
12.7 mm
[0.5 in]
9.5 mm
[0.37 in]
9.5 mm
[0.37 in]
101.6 mm
[4 in]
172.4 mm
[6.78 in]
Ø8 mm
[0.31 in]
Ø12 mm
[0.47 in]

PRO - 4.0"