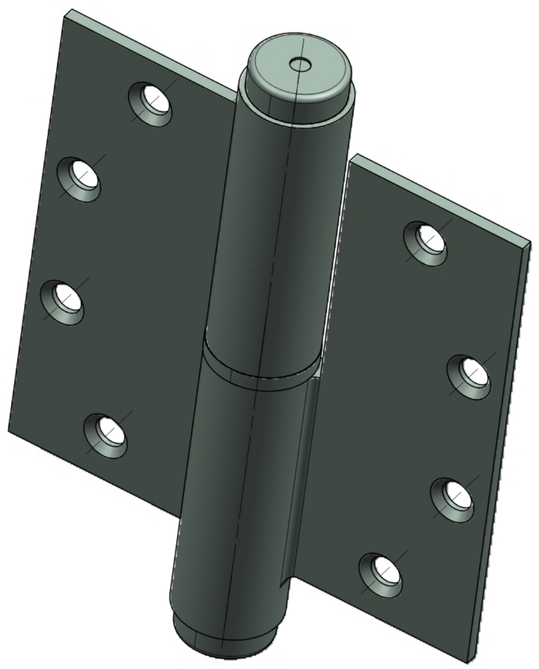

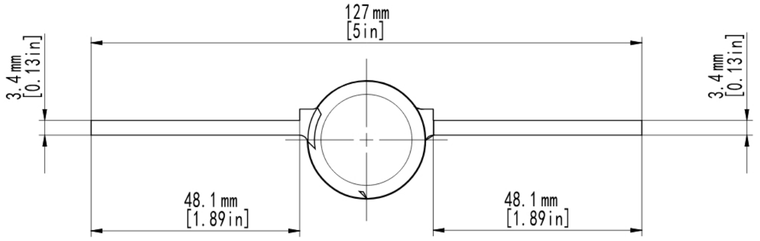
127 mm
[5 in]
3.4 mm
[0.13 in]
3.4 mm
[0.13 in]
48.1 mm
[1.89 in]
48.1 mm
[1.89 in]

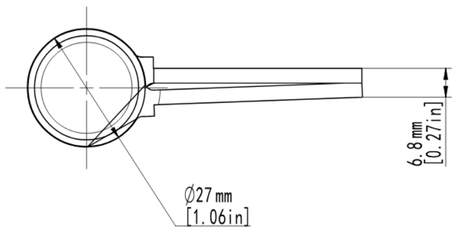
6.8 mm
[0.27 in]
Ø27 mm
[1.06 in]

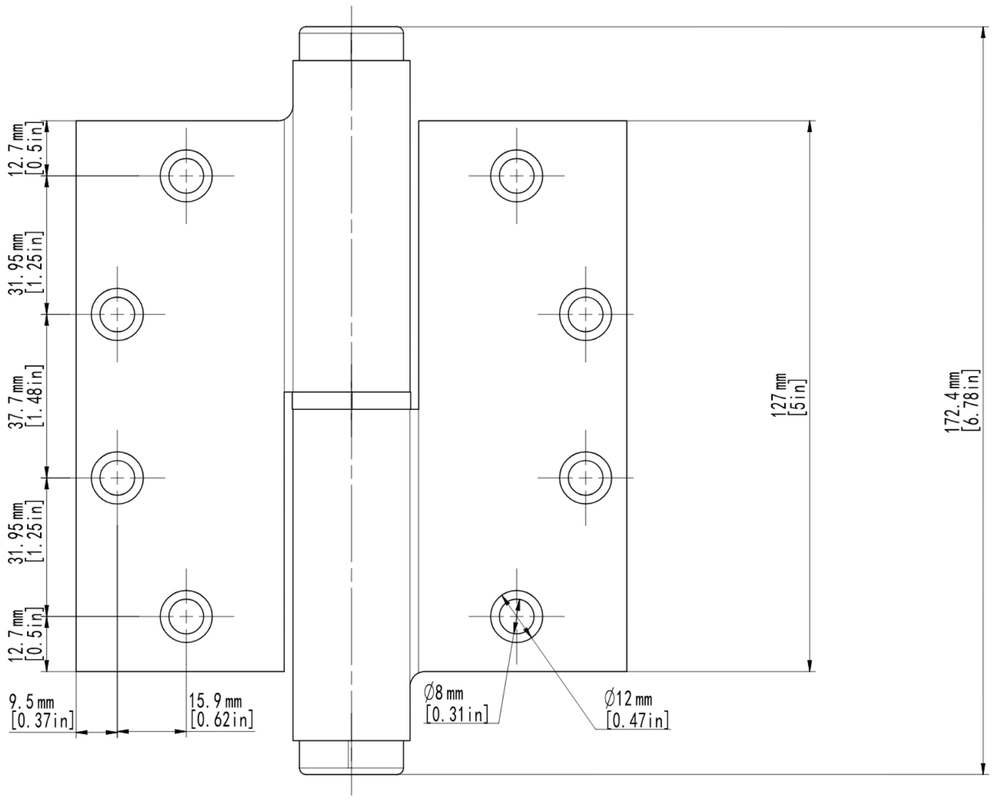
12.7 mm
[0.5 in]
31.95 mm
[1.25 in]
37.7 mm
[1.48 in]
31.95 mm
[1.25 in]
12.7 mm
[0.5 in]
9.5 mm
[0.37 in]
15.9 mm
[0.62 in]
Ø8 mm
[0.31 in]
Ø12 mm
[0.47 in]
127 mm
[5 in]
172.4 mm
[6.78 in]

PRO - 5.0"